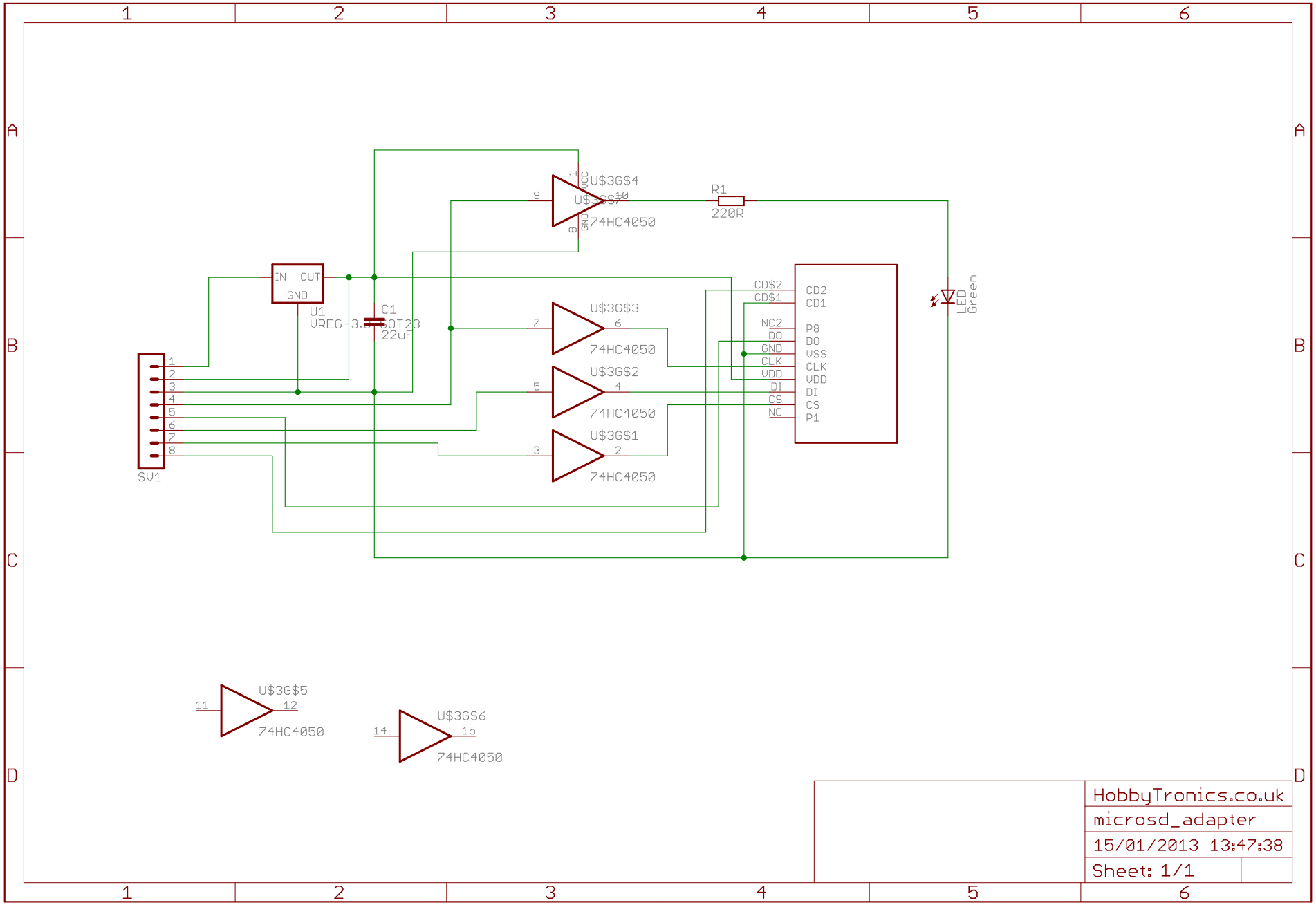

HobbyTronics.co.uk

microsd_adapter

15/01/2013 13:47:38

Sheet: 1/1