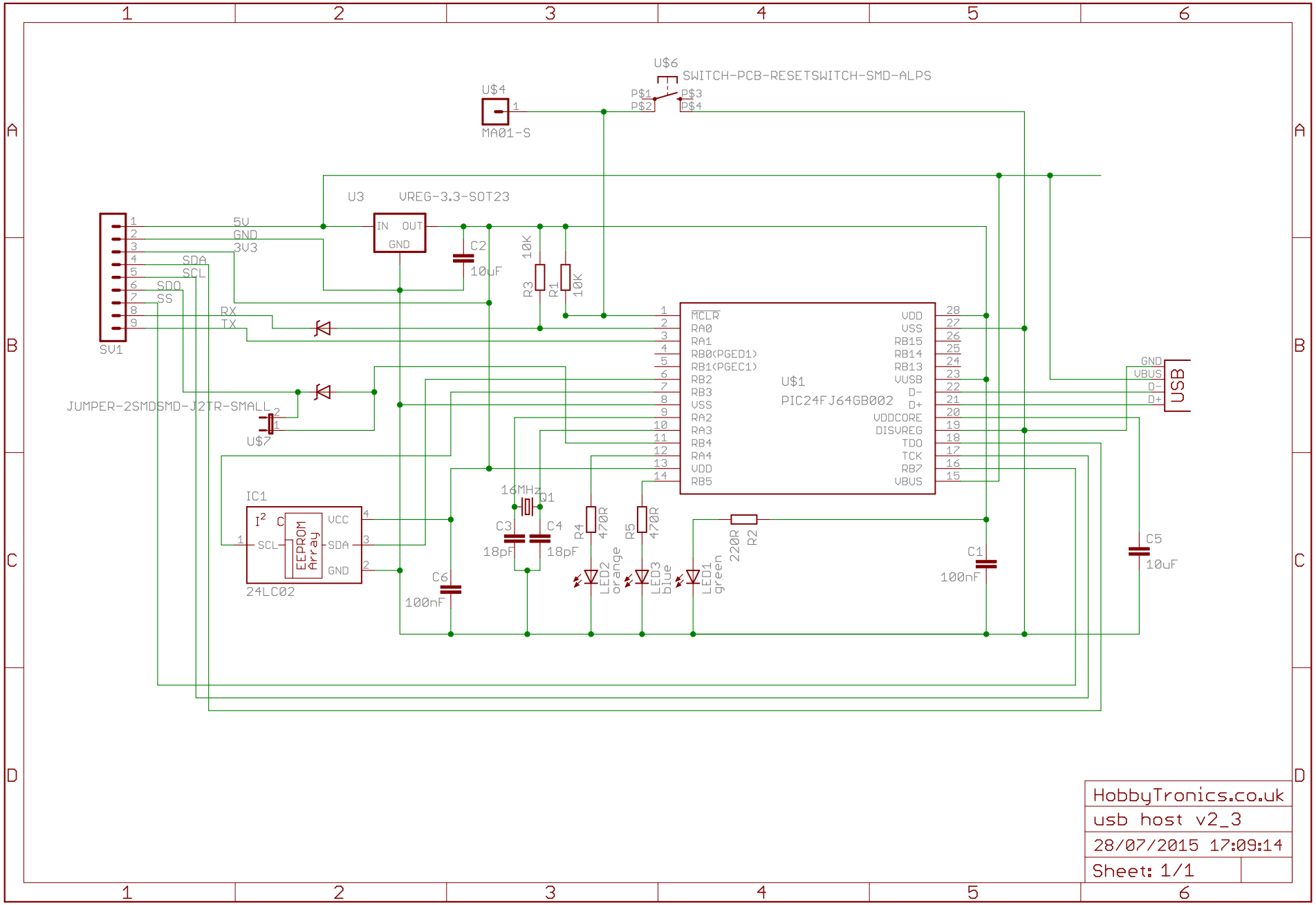

HobbyTronics.co.uk	
usb host v2_3	
28/07/2015 17:09:14	
Sheet: 1/1	